Work Order ID 48366

Friday, June 26, 2009 9:03:00 AM

Item ID: D350-591-312 **Accept** **Setup Start** **Stop**

Revision ID: B

Item Name: Heli-Access-Step, Long RH

Start Date: 7/15/2009 **Start Qty:** 10.00 **Cust Item ID:**

Required Date: 8/3/2009 **Req'd Qty:** 10.00 **Customer:**

Reference:

Run Start **Stop**

Approvals: **Process Plan:** _____ **Date:** _____ **Tooling:** _____ **Date:** _____

QC: _____ **Date:** _____ **SPC (Y/N):** _____ **Date:** _____

Sequence ID/ Work Center ID	Operation Description	Set Up/ Run Hours	Draw Number	Draw Rev.	Plan Code	Accept Qty	Reject Qty	Reject Number	Insp. Stamp
Draw Nbr	**Revision Nbr**								
D3272	Rev B								
100		0.00							
DC	DOCUMENT CONTROL								
Document Control	**Memo** Photocopy bluefile and type labels as per PPP D350-591-312 CHG001	0.00							
110		0.00							
Large Fab	Large Fab					10			
Large Fab	**Memo** 1-Bevel end for welding FWD ONLY□2-Weld Support using Jig DT8719, weld Fwd End Plate as per QSI 004 & Dwg D3272□A/RAluminum Rod M110130 M110972□3-Grind End Plate flush	0.00							
120	QC9- Inspect visual per QSI004- Fusion Welds	0.00							
QC									
Quality Control	**Memo**	0.00							

08/07/24 09/07/23

09.07.15

09.07.16

Work Order ID 48366

Friday, June 26, 2009 9:03:00 AM

Item ID: D350-591-312 **Accept** **Setup Start** **Stop**

Revision ID: B

Item Name: Heli-Access-Step, Long RH

Start Date: 7/15/2009 **Start Qty:** 10.00 **Cust Item ID:**

Required Date: 8/3/2009 **Req'd Qty:** 10.00 **Customer:**

Reference:

Run Start **Stop**

Approvals: **Process Plan:** _____ **Date:** _____ **Tooling:** _____ **Date:** _____

QC: _____ **Date:** _____ **SPC (Y/N):** _____ **Date:** _____

Sequence ID/ Work Center ID	Operation Description	Set Up/ Run Hours	Draw Number	Draw Rev.	Plan Code	Accept Qty	Reject Qty	Reject Number	Insp. Stamp
130	QC5- Inspect part completeness to step on W/O	0.00	27	S	07/07/16	4104	0		
QC	Memo	0.00							
Quality Control									
140	Chemical Conversion Coat per QSI005 4.1	0.00							
HandFinish	BK 09-07-16	10 HH.							
Hand Finishing	Memo	0.00							
150	QC3- Inspect Part Finish	0.00							
QC	Memo	0.00				10			
Quality Control									

09.07.16

Work Order ID 48366

Friday, June 26, 2009 9:03:00 AM

Item ID: D350-591-312 **Accept** **Setup Start** **Stop**

Revision ID: B

Item Name: Heli-Access-Step, Long RH

Start Date: 7/15/2009 **Start Qty:** 10.00 **Cust Item ID:**

Required Date: 8/3/2009 **Req'd Qty:** 10.00 **Customer:**

Reference:

Run Start **Stop**

Approvals: **Process Plan:** _____ **Date:** _____ **Tooling:** _____ **Date:** _____

QC: _____ **Date:** _____ **SPC (Y/N):** _____ **Date:** _____

Sequence ID/ Work Center ID	Operation Description	Set Up/ Run Hours	Draw Number	Draw Rev.	Plan Code	Accept Qty	Reject Qty	Reject Number	Insp. Stamp
160		0.00							
Large Fab	Large Fab					10			
Large Fab	**Memo**	0.00							
Large Fab	Assemble Leg Assembly as per Dwg D3272.								
170	QC5- Inspect part completeness to step on W/O	0.00							
QC						10			
Quality Control	**Memo**	0.00							
180		0.00							
Large Fab	Large Fab					10			
Large Fab	**Memo**	0.00							
Large Fab	1-Bevel Aft end for welding□2-Inspect for foreign object as per QSI 024□3-Weld Aft End Plate as per QSI 004 & Dwg D3272□A/RAluminum Rod M110130 □4-Grind End Plate flush □5-Install last rivet.								

Work Order ID 48366

Friday, June 26, 2009 9:03:00 AM

Item ID: D350-591-312
Revision ID: B
Item Name: Heli-Access-Step, Long RH

Accept

Setup Start
Stop

Start Date: 7/15/2009 **Start Qty:** 10.00
Required Date: 8/3/2009 **Req'd Qty:** 10.00
Reference:

Cust Item ID:
Customer:

Run Start
Stop

Approvals: **Process Plan:** _____ **Date:** _____ **Tooling:** _____ **Date:** _____
QC: _____ **Date:** _____ **SPC (Y/N):** _____ **Date:** _____

Sequence ID/ Work Center ID	Operation Description	Set Up/ Run Hours	Draw Number	Draw Rev.	Plan Code	Accept Qty	Reject Qty	Reject Number	Insp. Stamp
190	QC9- Inspect visual per QSI004- Fusion Welds	0.00	AD 09.07.17						
QC	Memo	0.00							
Quality Control									
200	QC5- Inspect part completeness to step on W/O	0.00	=7 S 09/07/17			(X10 RM)			
QC	Memo	0.00							
Quality Control									
210	Chemical Conversion Coat per QSI005 4.1	0.00	UMD 09/07/20			(X10)			
HandFinish	Memo	0.00							
Hand Finishing									

Work Order ID 48366

Friday, June 26, 2009 9:03:00 AM

Item ID: D350-591-312 **Accept** **Setup Start** **Stop**

Revision ID: B

Item Name: Heli-Access-Step, Long RH

Start Date: 7/15/2009 **Start Qty:** 10.00 **Cust Item ID:**

Required Date: 8/3/2009 **Req'd Qty:** 10.00 **Customer:**

Reference:

Run Start **Stop**

Approvals: **Process Plan:** _____ **Date:** _____ **Tooling:** _____ **Date:** _____

QC: _____ **Date:** _____ **SPC (Y/N):** _____ **Date:** _____

Sequence ID/ Work Center ID	Operation Description	Set Up/ Run Hours	Draw Number	Draw Rev.	Plan Code	Accept Qty	Reject Qty	Reject Number	Insp. Stamp
220	White Gloss(Ref:4.3.5.1) per QSI005 4.3-Alum	0.00							
Powdercoat	M 112148.								
	Memo	0.00	BL 09-07-21		(10)				
Powder Coating	START TIME: 3:45 ☐OVEN TEMPERATURE: 3300 ☐FINISH TIME: 4.15								
230	~~Pressure Wash per QSI005 4.3~~	0.00							
HandFinish	Wing Walk								
	Memo Batch: M 111013	0.00	UMD 09/07/23		(X18)				
Hand Finishing	09/07/21								
240	QC3- Inspect Part Finish	0.00							
QC			=> S 09/02/24		(YIORM)	ϕ			
	Memo	0.00							
Quality Control									

(PTO →)

Dart Aerospace Ltd

W/O:		WORK ORDER CHANGES					
DATE	STEP	PROCEDURE CHANGE	By	Date	Qty	Approval Chief Eng / Prod Mgr	Approval QC Inspector

Part No: D350-591-312 PAR #: N/A Fault Category: Large fab. NCR: (Yes) No DQA: N/A Date: 09-07-28

Resolution: Re-work Disposition: Re-work QA: N/C Closed: Date: 09-08-15

NCR: 48366		WORK ORDER NON-CONFORMANCE (NCR)						
			Corrective Action Section B					
DATE	STEP	Description of NC Section A	Initial Chief Eng	Action Description Chief Eng	Sign & Date	Verification Section C	Approval Chief Eng	Approval QC Inspector
9/7/22	Found @ Step 240	During QC3 Powdercoat inspection it was found that some welding was not properly ground down on one side on face (Aft end). Found on after P.L and wing walk. R.L missed at welding inspection and missed at QC5. Lack of attention	QS/MR	- Buff as usual. & sand smooth - Touch-up with Molcline per QS/MR - Do Not Mask off step - Re-powder coat the affected Area	09-07-22 MR 09/07/22 09-07-22	09/07/22	QS/MR	9/7/22
			QS/MR	- Ensure surface is smooth prior to powder coating	09-07-22	09/07/22	QS/MR	09/07/22
		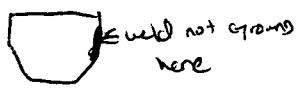 weld not ground here Aft End	QS/MR				QS/MR	

NOTE: Date & initial all entries

H:\fFORMS\Quality Assurance\approved QA\NCRWO RevE

Work Order ID 48366

Friday, June 26, 2009 9:03:00 AM

Item ID: D350-591-312
Revision ID: B
Item Name: Heli-Access-Step, Long RH

Accept

Setup Start
Stop

Start Date: 7/15/2009 **Start Qty:** 10.00
Required Date: 8/3/2009 **Req'd Qty:** 10.00
Reference:

Cust Item ID:
Customer:

Run Start
Stop

Approvals: **Process Plan:** _____ **Date:** _____ **Tooling:** _____ **Date:** _____
QC: _____ **Date:** _____ **SPC (Y/N):** _____ **Date:** _____

Sequence ID/ Work Center ID	Operation Description	Set Up/ Run Hours	Draw Number	Draw Rev.	Plan Code	Accept Qty	Reject Qty	Reject Number	Insp. Stamp
250	Pick Kit	0.00				9/7/24		(10x)	Sep
Packaging	Memo	0.00							
Packaging									
260	QC4- 100% Inspect kits for completeness	0.00							
QC	Memo	0.00							
Quality Control									
270	Packaging	0.00							
Packaging	Memo	0.00							
Packaging	Identify and pack for shipping as per PPP D350-591-312□Location: 65								

=> Sep 24/24

(10x) 6

9/17/24 (10)

Work Order ID 48366

Friday, June 26, 2009 9:03:00 AM

Item ID: D350-591-312
Revision ID: B
Item Name: Heli-Access-Step, Long RH

Accept

Setup **Start**
Stop

Start Date: 7/15/2009 **Start Qty:** 10.00
Required Date: 8/3/2009 **Req'd Qty:** 10.00
Reference:

Cust Item ID:
Customer:

Run **Start**
Stop

Approvals: **Process Plan:** _____ **Date:** _____ **Tooling:** _____ **Date:** _____
QC: _____ **Date:** _____ **SPC (Y/N):** _____ **Date:** _____

Sequence ID/ Work Center ID	Operation Description	Set Up/ Run Hours	Draw Number	Draw Rev.	Plan Code	Accept Qty	Reject Qty	Reject Number	Insp. Stamp
280	QC21- Final Inspection - Work Order Release	0.00				09/07/28			
QC Quality Control	**Memo**	0.00							

09-07-27

Picklist Print

Friday, June 26, 2009 9:03:00 AM

Work Order ID: 48366

Parent Item: D350-591-312RevB

Parent Item Name: Heli-Access-Step, Long RH

Comments:

Start Date: 7/15/2009 **Required Date:** 8/3/2009

Start Qty: 10.00 **Required Qty:** 10.00

Component Item ID/ Item Name	Replacement Item ID	Mfg/ Purch	Bin Item	Primary Location	Last Location	Route Seq ID	Unit of Measure	Qty on Hand	Remaining Qty To Pick	Qty Issued	Date Issued	Status
D3067-1RevA		Manufactured	No			110	Each	0.0000	10.0000	B 48242		
End Plate D3272-1RevB		Manufactured	No			110	Each	0.0000	10.0000	B 48416		
Step MS21042L5 x2		Purchased	No	9/7/24		110	Each	0.0000	20.0000	M111127		SP
Nut D3065-041RevB		Manufactured	No			160	Each	0.0000	10.0000	* B 47090		
Step Leg Assembly Hi D3066-1RevB		Manufactured	No			160	Each	0.0000	20.0000	* B 47185 = 11	B 48414 = 9	
Spacer D3219-1RevA		Manufactured	No			160	Each	0.0000	20.0000	* B 47296		
Plate MS20600-AD4W4		Purchased	No			180	Each	0.0000	160.0000	* M111477		
Rivets AN3-35A x2		Purchased	No	9/7/24		260	Each	2 0.0000	20.0000	M110467		SP
Bolt AN4-13A x8		Purchased	No	9/7/24		260	Each	8 0.0000	80.0000	M111925		SP
Bolt												

(10x)

Picklist Print

Friday, June 26, 2009 9:03:00 AM

Work Order ID: 48366

Parent Item: D350-591-312RevB

Parent Item Name: Heli-Access-Step, Long RH

Comments:

Start Date: 7/15/2009 **Required Date:** 8/3/2009

Start Qty: 10.00 **Required Qty:** 10.00

Component Item ID/ Item Name	Replacement Item ID	Mfg/ Purch	Bin Item	Primary Location	Last Location	Route Seq ID	Unit of Measure	Qty on Hand	Remaining Qty To Pick	Qty Issued	Date Issued	Status
AN5-36A x2		Purchased	No	9/4/24		260	Each	2 0.0000	20.0000	M111808		SP
Bolt AN960JD10 x4		Purchased	No	9/7/24		260	Each	4 0.0000	40.0000	M111668		SP
Washer AN960JD416 x16		Purchased	No	9/7/24		260	Each	0.0000 16	160.0000	111279		SP
Washer AN960JD516 x4		Purchased	No	9/7/24		260	Each	0.0000 4	40.0000	111279 (33)	M112082	SP (7)
Washer D2230-3RevE x4 "Rev F"		Manufactured	No	9/7/24		260	Each	0.0000 4	40.0000	47965		SP
Lug D2618RevB1 x2		Manufactured	No	9/7/24		260	Each	0.0000 2	20.0000	45392		SP
Bushing D2856-400RevA @ 7.20 Long		Manufactured	No	9/7/24		260	f	2 0.0000	6.0000	46543		SP
Abraison Strip D3067-1RevA		Manufactured	No			260	Each	0.0000	10.0000	B48242		
End Plate D3235-1RevA x2		Manufactured	No	9/9/24		260	Each	0.0000 2	20.0000	45269 (6x) 3	45398	(14x)
Mounting Lug												

(10x)

Date: Wednesday, 03/06/2009 10:50:25 AM
User: Julie Dawson

Process Sheet

Customer : CC-EUR01 Eurocopter France
Job Number : 48366
Estimate Number : 13561
P.O. Number :
This Issue : 03/06/2009 **S.O. No.** :
Prsht Rev. : NC
First Issue : / / **Type** : LARGE FAB ASSY
Previous Run : 47860
Written By :
Checked & Approved By : JLD 09.06.03
Comment : Est Rev:A 04.03.22 New issue KJ/RF
Est Rev:B 07-06-09 Added D3572-1 JLM
Est. returned to CHG001 for Eurocopter, ref NCR08-082 LL verifed by:EC

Drawing Name : LONG STEP ASSEMBLY HIGH SKID RH
Part Number : D350591312
Drawing Number : D3272 REVB-EUROCOPTR
Project Number : N/A
Drawing Revision : B
Material :
Due Date : 26/06/2009 **Qty:** 10 **Um:** Each

Additional Product

Job Number:

Seq. #:	Machine Or Operation:	Description :
1.0 ✓	DC	DOCUMENT CONTROL

Comment: DOCUMENT CONTROL
Photocopy bluefile and type labels as per PPP D350-591-312 CHG001

Seq. #:	Machine Or Operation:	Description :
2.0 ✓	D32721	Step

Comment: Qty.: 1.0000 Each(s)/Unit Total : 10.0000 Each(s)
STEP
BATCH: B48416 09.07.15 10

Seq. #:	Machine Or Operation:	Description :
3.0 ✓	D30671	End Plate

Comment: Qty.: 1.0000 Each(s)/Unit Total : 10.0000 Each(s)
Pick:

Qty	Part Number	Description	Batch
1	D3067-1	End Plate	B48242

09.07.15 10

Seq. #:	Machine Or Operation:	Description :
4.0 ✓	D32191	Plate

Comment: Qty.: 2.0000 Each(s)/Unit Total : 20.0000 Each(s)
Pick:

Qty	Part Number	Description	Batch
2	D3219-1	Support	B47296

09.07.15 10

Dart Aerospace Ltd

W/O:		WORK ORDER CHANGES					
DATE	STEP	PROCEDURE CHANGE	By	Date	Qty	Approval Chief Eng / Prod Mgr	Approval QC Inspector

Part No: _____ PAR #: _____ Fault Category: _____ NCR: Yes No DQA: _____ Date: _____

Resolution: _____ Disposition: _____ QA: N/C Closed: _____ Date: _____

NCR:		WORK ORDER NON-CONFORMANCE (NCR)						
DATE	STEP	Description of NC Section A	Corrective Action Section B			Verification Section C	Approval Chief Eng	Approval QC Inspector
			Initial Chief Eng	Action Description Chief Eng	Sign & Date			

NOTE: Date & initial all entries

H:\fFORMS\Quality Assurance\approved QA\NCRWO RevE

Date: Wednesday, 03/06/2009 10:50:25 AM
User: Julie Dawson

Process Sheet

Customer: CC-EUR01 Eurocopter France **Drawing Name:** LONG STEP ASSEMBLY HIGH SKID RH

Job Number: 48366 **Part Number:** D350591312

Job Number:

Seq. #:	Machine Or Operation:	Description :
5.0 ✓	LARGE FAB 1	LARGE FABRICATION RESOURCE 1

Comment: LARGE FABRICATION RESOURCE 1

1-Bevel end for welding FWD ONLY — 09.07.15 10

2-Weld Support using Jig DT8719, weld Fwd End Plate as per QSI 004 & Dwg D3272 — 09.07.15 10

A/R Aluminum Rod M110130 M110912

3-Grind End Plate flush — 09.07.15 10

6.0 ✓	QC9	VISUAL WELDING INSPECTION

Comment: VISUAL WELDING INSPECTION — PD 09.07.16 (10)

7.0 ✓	QC5	INSPECT WORK TO CURRENT STEP

Comment: INSPECT WORK TO CURRENT STEP — 09/07/16 (1044)

8.0 ✓	HAND FINISHING1	HAND FINISHING RESOURCE #1

Comment: HAND FINISHING RESOURCE #1
Chemical Conversion Coat as per QSI 005 4.1

9.0 ✓	QC3	INSPECT POWDER COAT/CHEMICAL CONVERSION

Comment: INSPECT POWDER COAT/CHEMICAL CONVERSION — 09.07.16 10

10.0 ✓	D3065041	Step Leg Assembly Hi

Comment: Qty.: 1.0000 Each(s)/Unit Total : 10.0000 Each(s)
Pick:

Qty	Part Number	Description	Batch
1	D3065-041	Step Leg Assy	_____

11.0 ✓	D30661	Spacer

Comment: Qty.: 2.0000 Each(s)/Unit Total : 20.0000 Each(s)
Pick:

Qty	Part Number	Description	Batch
2	D3066-1	Spacer	_____

Form: rprocess

Dart Aerospace Ltd

W/O:		WORK ORDER CHANGES					
DATE	STEP	PROCEDURE CHANGE	By	Date	Qty	Approval Chief Eng / Prod Mgr	Approval QC Inspector

Part No: _____ **PAR #:** _____ **Fault Category:** _____ **NCR:** Yes No **DQA:** _____ **Date:** _____

Resolution: _____ **Disposition:** _____ **QA: N/C Closed:** _____ **Date:** _____

NCR:		WORK ORDER NON-CONFORMANCE (NCR)						
DATE	STEP	Description of NC Section A	Corrective Action Section B			Verification Section C	Approval Chief Eng	Approval QC Inspector
			Initial Chief Eng	Action Description Chief Eng	Sign & Date			

NOTE: Date & initial all entries

H:\fFORMS\Quality Assurance\approved QA\NCRWO RevE

Date: Wednesday, 03/06/2009 10:50:25 AM
User: Julie Dawson

Process Sheet

Customer: CC-EUR01 Eurocopter France
Drawing Name: LONG STEP ASSEMBLY HIGH SKID RH

Job Number: 48366
Part Number: D350591312

Job Number:

Seq. #:	Machine Or Operation:	Description :
12.0	MS20600AD4W4	Rivets

Comment: Qty.: 16.0000 Each(s)/Unit Total : 160.0000 Each(s)
Pick:

Qty	Part Number	Description	Batch
16	MS20600AD4W4	Rivet	_____

13.0	LARGE FAB 1	LARGE FABRICATION RESOURCE 1

Comment: LARGE FABRICATION RESOURCE 1
Assemble Leg Assembly as per Dwg D3272.

14.0	QC5	INSPECT WORK TO CURRENT STEP

Comment: INSPECT WORK TO CURRENT STEP

15.0	D30671	End Plate

Comment: Qty.: 1.0000 Each(s)/Unit Total : 10.0000 Each(s)
Pick:

Qty	Part Number	Description	Batch
1	D3067-1	End Plate	_____

16.0	LARGE FAB 1	LARGE FABRICATION RESOURCE 1

Comment: LARGE FABRICATION RESOURCE 1

1-Bevel Aft end for welding

2-Inspect for foreign object as per QSI 024

3-Weld Aft End Plate as per QSI 004 & Dwg D3272
A/R Aluminum Rod _____

4-Grind End Plate flush

5-Install last rivet.

Form: rprocess

Dart Aerospace Ltd

W/O:		WORK ORDER CHANGES					
DATE	STEP	PROCEDURE CHANGE	By	Date	Qty	Approval Chief Eng / Prod Mgr	Approval QC Inspector

Part No: _____ **PAR #:** _____ **Fault Category:** _____ **NCR:** Yes No **DQA:** _____ **Date:** _____

Resolution: _____ **Disposition:** _____ **QA: N/C Closed:** _____ **Date:** _____

NCR:		WORK ORDER NON-CONFORMANCE (NCR)						
DATE	STEP	Description of NC Section A	Corrective Action Section B			Verification Section C	Approval Chief Eng	Approval QC Inspector
			Initial Chief Eng	Action Description Chief Eng	Sign & Date			

NOTE: Date & initial all entries

Date: Wednesday, 03/06/2009 10:50:26 AM
User: Julie Dawson

Process Sheet

Customer: CC-EUR01 Eurocopter France
Drawing Name: LONG STEP ASSEMBLY HIGH SKID RH

Job Number: 48366
Part Number: D350591312

Job Number:

Seq. #:	Machine Or Operation:	Description :
17.0	QC9	VISUAL WELDING INSPECTION
	Comment: VISUAL WELDING INSPECTION	
18.0	QC5	INSPECT WORK TO CURRENT STEP
	Comment: INSPECT WORK TO CURRENT STEP	02/02/17
19.0	HAND FINISHING1	HAND FINISHING RESOURCE #1
	Comment: HAND FINISHING RESOURCE #1 Touch up Alodine	
20.0	POWDER COATING	POWDER COATING
	Comment: POWDER COATING Powder Coat White Gloss (Ref: 4.3.5.1) as per QSI 005 4.3 START TIME: _____ OVEN TEMPERATURE: _____ FINISH TIME: _____	
21.0	HAND FINISHING1	HAND FINISHING RESOURCE #1
	Comment: HAND FINISHING RESOURCE #1 Wing Walk as per Dwg D3272 and QSI 005 4.4	
22.0	QC3	INSPECT POWDER COAT/CHEMICAL CONVERSION
	Comment: Inspect Powder Coat and Wing Walk	
23.0	PACKAGING 1	PACKAGING RESOURCE #1
	Comment: PACKAGING RESOURCE #1 Pick Packing Kit	
24.0	D22303	Lug
	Comment: Qty.: 4.0000 Each(s)/Unit Total : 40.0000 Each(s) Pick: Packing Kit Qty Part Number Description Batch 4 D2230-3 Mounting Lug _____	

Form: rprocess

Dart Aerospace Ltd

W/O:		WORK ORDER CHANGES					
DATE	STEP	PROCEDURE CHANGE	By	Date	Qty	Approval Chief Eng / Prod Mgr	Approval QC Inspector

Part No: _____ **PAR #:** _____ **Fault Category:** _____ **NCR:** Yes No **DQA:** _____ **Date:** _____

Resolution: _____ **Disposition:** _____ **QA: N/C Closed:** _____ **Date:** _____

NCR:		WORK ORDER NON-CONFORMANCE (NCR)						
DATE	STEP	Description of NC Section A	Corrective Action Section B			Verification Section C	Approval Chief Eng	Approval QC Inspector
			Initial Chief Eng	Action Description Chief Eng	Sign & Date			

NOTE: Date & initial all entries

H:\fFORMS\Quality Assurance\approved QA\NCRWO RevE

Date: Wednesday, 03/06/2009 10:50:26 AM
User: Julie Dawson

Process Sheet

Customer: CC-EUR01 Eurocopter France **Drawing Name:** LONG STEP ASSEMBLY HIGH SKID RH

Job Number: 48366 **Part Number:** D350591312

Job Number:

Seq. #:	Machine Or Operation:	Description :
25.0	D2618	Bushing

Comment: Qty.: 2.0000 Each(s)/Unit Total : 20.0000 Each(s)
Pick: Packing Kit

Qty	Part Number	Description	Batch
2	D2618	Bushing	_____

26.0	D2856400	Abraison Strip

Comment: Qty.: 0.6000 f(s)/Unit Total : 6.0000 f(s)
Abraison Strip
2 x D2856-400-720 _____

27.0	D32351	Mounting Lug

Comment: Qty.: 2.0000 Each(s)/Unit Total : 20.0000 Each(s)
Pick: Packing Kit

Qty	Part Number	Description	Batch
2	D3235-1	Mounting Lug	_____

28.0	D3278041	Support Assembly

Comment: Qty.: 1.0000 Each(s)/Unit Total : 10.0000 Each(s)
Pick: Packing Kit

Qty	Part Number	Description	Batch
1	D3278-041	Support Assembly	_____

29.0	AN335A	Bolt

Comment: Qty.: 2.0000 Each(s)/Unit Total : 20.0000 Each(s)
Pick: Packing Kit

Qty	Part Number	Description	Batch
2	AN3-35A	Bolt	_____

30.0	AN413A	Bolt

Comment: Qty.: 8.0000 Each(s)/Unit Total : 80.0000 Each(s)
Bolt
batch:_____

Form: rprocess

Dart Aerospace Ltd

W/O:		WORK ORDER CHANGES					
DATE	STEP	PROCEDURE CHANGE	By	Date	Qty	Approval Chief Eng / Prod Mgr	Approval QC Inspector

Part No: _____ PAR #: _____ Fault Category: _____ NCR: Yes No DQA: _____ Date: _____

Resolution: _____ Disposition: _____ QA: N/C Closed: _____ Date: _____

NCR:		WORK ORDER NON-CONFORMANCE (NCR)						
DATE	STEP	Description of NC Section A	Corrective Action Section B			Verification Section C	Approval Chief Eng	Approval QC Inspector
			Initial Chief Eng	Action Description Chief Eng	Sign & Date			

NOTE: Date & initial all entries

H:\fFORMS\Quality Assurance\approved QA\NCRWO RevE

Date: Wednesday, 03/06/2009 10:50:26 AM
User: Julie Dawson

Process Sheet

Customer: CC-EUR01 Eurocopter France **Drawing Name:** LONG STEP ASSEMBLY HIGH SKID RH

Job Number: 48366 **Part Number:** D350591312

Job Number:

Seq. #:	Machine Or Operation:	Description :
31.0	AN536A	Bolt

Comment: Qty.: 2.0000 Each(s)/Unit Total : 20.0000 Each(s)
Pick: Packing Kit

Qty	Part Number	Description	Batch
2	AN5-36A	Bolt	_____

32.0	AN960JD10	Washer

Comment: Qty.: 4.0000 Each(s)/Unit Total : 40.0000 Each(s)
Pick: Packing Kit

Qty	Part Number	Description	Batch
4	AN960JD10	Washer	_____

33.0	AN960JD416	Washer

Comment: Qty.: 16.0000 Each(s)/Unit Total : 160.0000 Each(s)
Pick: Packing Kit

Qty	Part Number	Description	Batch
16	AN960JD416	Washer	_____

34.0	AN960JD516	Washer

Comment: Qty.: 4.0000 Each(s)/Unit Total : 40.0000 Each(s)
Pick: Packing Kit

Qty	Part Number	Description	Batch
4	AN960JD516	Washer	_____

35.0	MS21042L3	Nut

Comment: Qty.: 2.0000 Each(s)/Unit Total : 20.0000 Each(s)
Pick: Packing Kit

Qty	Part Number	Description	Batch
2	MS21042L3	Nut (or -3)	_____

Form: rprocess

Dart Aerospace Ltd

W/O:		WORK ORDER CHANGES					
DATE	STEP	PROCEDURE CHANGE	By	Date	Qty	Approval Chief Eng / Prod Mgr	Approval QC Inspector

Part No: _____ PAR #: _____ Fault Category: _____ NCR: Yes No DQA: _____ Date: _____

Resolution: _____ Disposition: _____ QA: N/C Closed: _____ Date: _____

NCR:		WORK ORDER NON-CONFORMANCE (NCR)						
DATE	STEP	Description of NC Section A	Corrective Action Section B			Verification Section C	Approval Chief Eng	Approval QC Inspector
			Initial Chief Eng	Action Description Chief Eng	Sign & Date			

NOTE: Date & initial all entries

H:\fFORMS\Quality Assurance\approved QA\NCRWO RevE

Date: Wednesday, 03/06/2009 10:50:26 AM
User: Julie Dawson

Process Sheet

Customer: CC-EUR01 Eurocopter France
Drawing Name: LONG STEP ASSEMBLY HIGH SKID RH

Job Number: 48366
Part Number: D350591312

Job Number:

Seq. #:	Machine Or Operation:	Description :
36.0	MS21042L4	Nut

Comment: Qty.: 8.0000 Each(s)/Unit Total : 80.0000 Each(s)
Pick: Packing Kit

Qty	Part Number	Description	Batch
8	MS21042L4	Nut (or -4)	_____

37.0	MS21042L5	Nut

Comment: Qty.: 2.0000 Each(s)/Unit Total : 20.0000 Each(s)
Pick: Packing Kit

Qty	Part Number	Description	Batch
2	MS21042L5	Nut (or -5)	_____

38.0	QC4	INSPECT 100% KITS FOR COMPLETENESS

Comment: INSPECT 100% KITS FOR COMPLETENESS

39.0	PACKAGING 1	PACKAGING RESOURCE #1

Comment: PACKAGING RESOURCE #1
Identify and pack for shipping as per PPP D350-591-312
Location:_____

40.0	QC21	FINAL INSPECTION/W/O RELEASE

Comment: FINAL INSPECTION/W/O RELEASE

Job Completion

Form: rprocess

Dart Aerospace Ltd

W/O:		WORK ORDER CHANGES					
DATE	STEP	PROCEDURE CHANGE	By	Date	Qty	Approval Chief Eng / Prod Mgr	Approval QC Inspector

Part No: _____ PAR #: _____ Fault Category: _____ NCR: Yes No DQA: _____ Date: _____

Resolution: _____ Disposition: _____ QA: N/C Closed: _____ Date: _____

NCR:		WORK ORDER NON-CONFORMANCE (NCR)						
DATE	STEP	Description of NC Section A	Corrective Action Section B			Verification Section C	Approval Chief Eng	Approval QC Inspector
			Initial Chief Eng	Action Description Chief Eng	Sign & Date			

NOTE: Date & initial all entries

H:\fFORMS\Quality Assurance\approved QA\NCRWO RevE

DESIGN	DRAWN BY	DART AEROSPACE LTD HAWKESBURY, ONTARIO, CANADA	
CHECKED	APPROVED	DRAWING NO. D3272	REV. B SHEET 1 OF 3
DATE 07.05.18		TITLE STEP ASSEMBLY, HI LONG	SCALE NTS

A	04.03.01	NEW ISSUE
B	07.05.18	D3272-1 WAS D2622-120

RELEASED
07 06 04

QTY -041	QTY -042	PART NUMBER	DESCRIPTION
X		**D3272-041**	**STEP ASSEMBLY, HIGH LONG (LH)**
	X	**D3272-042**	**STEP ASSEMBLY, HIGH LONG (RH)**
1	1	D3065-041	LEG ASSEMBLY
2	2	D3066-1	SPACER
2	2	D3067-1	END PLATE
2	2	D3219-1	SUPPORT
B 1	1	D3272-1	STEP
16	16	MS20600AD4W4	RIVET

GENERAL NOTES:

1) D3272-041 SHOWN. FOR D3272-042, INSTALL D3219-1 SUPPORT OPPOSITE SIDE
2) WELD PER DART QSI 004
3) FINISH: CHEMICAL CONVERSION COAT PER DART QSI 005.4.1
   POWDER COAT ASSEMBLY WHITE (4.3.5.1) PER DART QSI 005 4.3
   BLACK ANTI-SKID PAINT PER DART QSI 005 4.4
4) TOLERANCES ARE PER DART QSI 018 UNLESS OTHERWISE NOTED.
5) ALL DIMENSIONS ARE IN INCHES UNLESS OTHERWISE NOTED.
6) BREAK ALL SHARP EDGES 0.005 TO 0.010 MAX.

SHOP COPY
RETURN TO
ENGINEERING
UNCONTROLLED COPY
SUBJECT TO AMENDMENT
WITHOUT NOTICE
WORK ORDER
NO. 4836Cp

Copyright © 2004 by DART AEROSPACE LTD
THIS DOCUMENT IS PRIVATE AND CONFIDENTIAL AND IS SUPPLIED ON THE EXPRESS CONDITION THAT IT IS NOT TO BE USED FOR ANY PURPOSE OR COPIED OR COMMUNICATED TO ANY OTHER PERSON WITHOUT WRITTEN PERMISSION FROM DART AEROSPACE LTD.

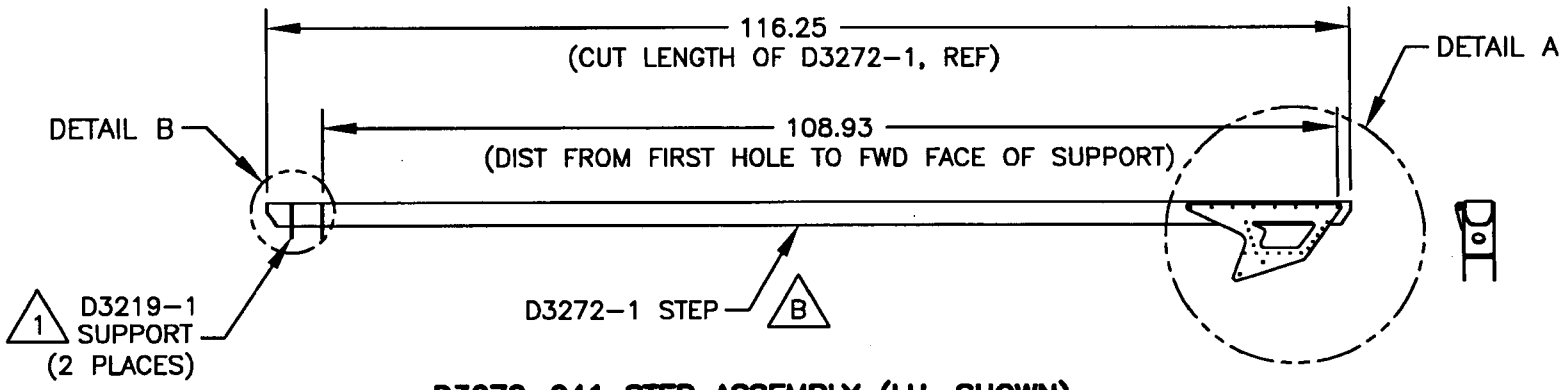

D3272-041 STEP ASSEMBLY (LH, SHOWN)

D3272-042 STEP ASSEMBLY (RH, OPPOSITE)

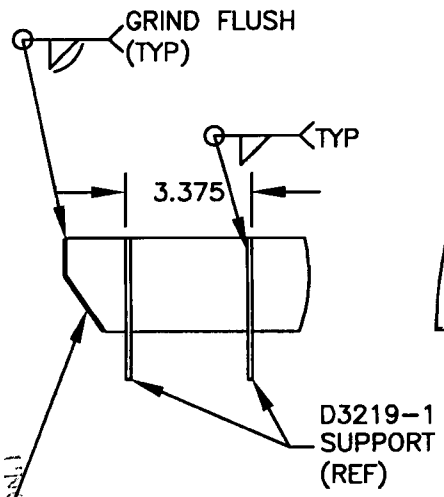

DETAIL B
(SCALE 1:5)

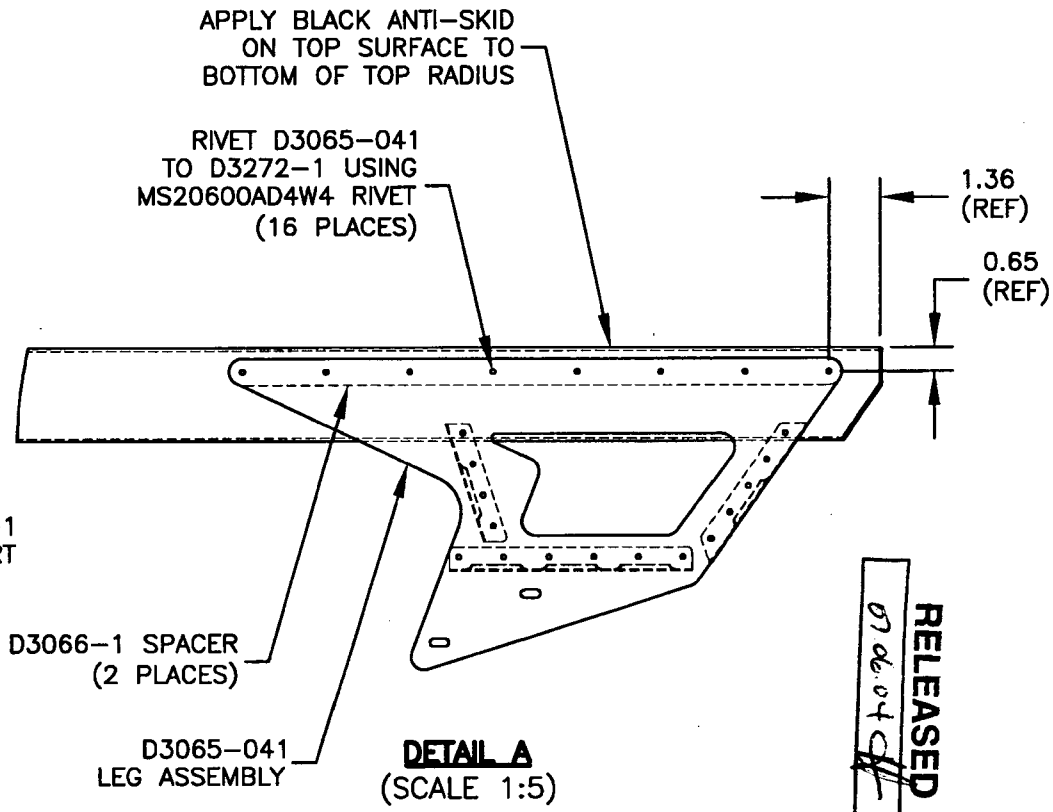

DETAIL A
(SCALE 1:5)

RELEASED
07.06.04

UNCONTROLLED COPY
SUBJECT TO AMENDMENT
WITHOUT NOTICE
ENGINEERING
RETURN TO
STOP COPY
NO. 478368

DESIGN	DRAWN BY	DART AEROSPACE LTD HAWKESBURY, ONTARIO, CANADA	
CHECKED	APPROVED	DRAWING NO. D3272	REV. B
DATE 07.05.18		TITLE STEP ASSEMBLY, HI LONG	SHEET 2 OF 3
			SCALE 1:20

Copyright © 2004 by DART AEROSPACE LTD
THIS DOCUMENT IS PRIVATE AND CONFIDENTIAL AND IS SUPPLIED ON THE EXPRESS CONDITION THAT IT IS NOT TO BE USED FOR ANY PURPOSE OR COPIED OR COMMUNICATED TO ANY OTHER PERSON WITHOUT WRITTEN PERMISSION FROM DART AEROSPACE LTD.

DESIGN	DRAWN BY	DART AEROSPACE LTD HAWKESBURY, ONTARIO, CANADA	
CHECKED	APPROVED	DRAWING NO. D3272	REV. B SHEET 3 OF 3
DATE 07.05.18		TITLE STEP ASSEMBLY, HI LONG	SCALE 1:20

RELEASED
07.06.04

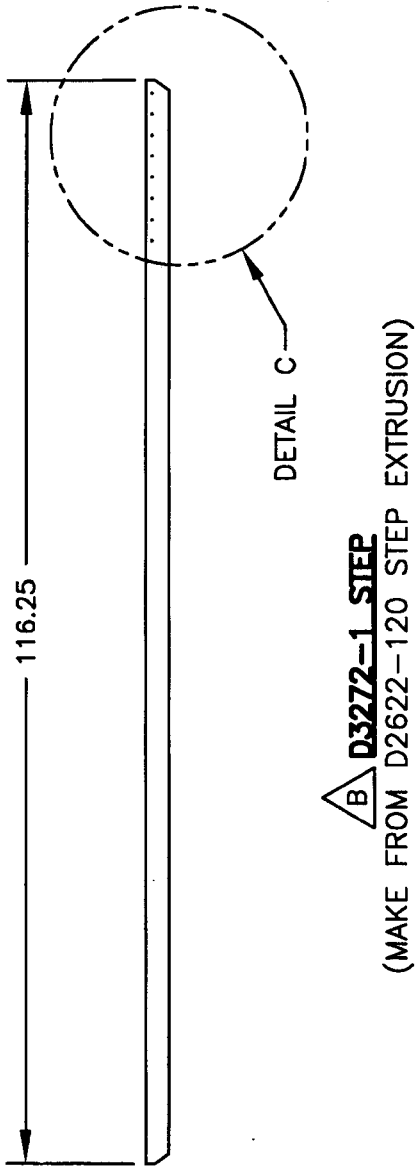

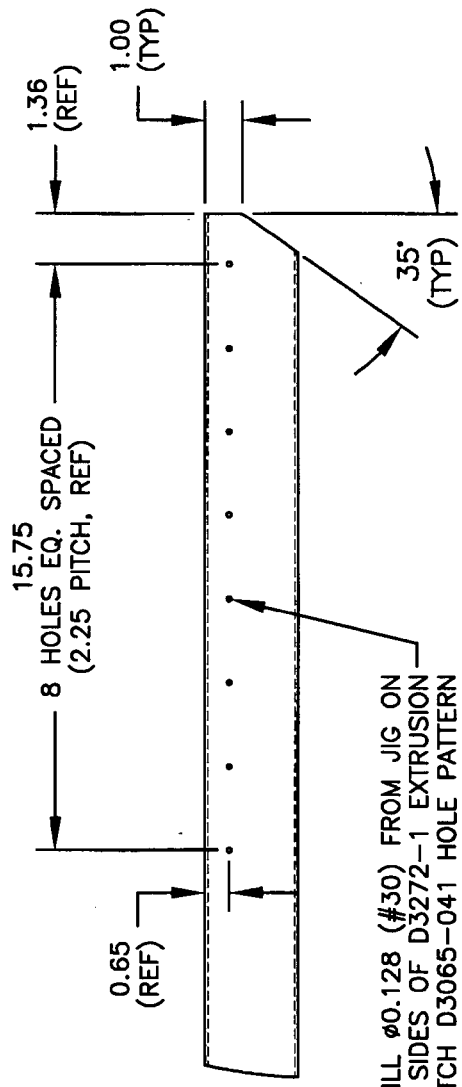

DETAIL C
(SCALE 1:5)

COPY
RETURN TO
ENGINEERING
UNCONTROLLED COPY
SUBJECT TO AMENDMENT
WITHOUT NOTICE
WORK ORDER
NO. 48366

Copyright © 2004 by DART AEROSPACE LTD

THIS DOCUMENT IS PRIVATE AND CONFIDENTIAL AND IS SUPPLIED ON THE EXPRESS CONDITION THAT IT IS NOT TO BE USED FOR ANY PURPOSE OR COPIED OR COMMUNICATED TO ANY OTHER PERSON WITHOUT WRITTEN PERMISSION FROM DART AEROSPACE LTD.

Qty -211	Qty -212	Qty -213	Qty -214	Qty -215	Qty -216	Qty -311	Qty -312	Part Number	Description
X								D350-591-211	***Heli-Access-Step***™, Long Step – High Skid, LH
	X							D350-591-212	***Heli-Access-Step***™, Long Step – High Skid, RH
		X						D350-591-213	***Heli-Access-Step***™, Short Step – High Skid, LH
			X					D350-591-214	***Heli-Access-Step***™, Short Step – High Skid, RH
				X				D350-591-215	***Heli-Access-Step***™, Short Step – Low Skid, LH
					X			D350-591-216	***Heli-Access-Step***™, Short Step – Low Skid, RH
						X		D350-591-311	***Heli-Access-Step***™, Long Step – High Skid, LH
							X	D350-591-312	***Heli-Access-Step***™, Long Step – High Skid, RH
1								D3070-041	STEP ASSEMBLY (HIGH-LONG, LH)
	1							D3070-042	STEP ASSEMBLY (HIGH-LONG, RH)
		1						D3078-041	STEP ASSEMBLY (HIGH-SHORT, LH)
			1					D3078-042	STEP ASSEMBLY (HIGH-SHORT, RH)
				1				D3168-041	STEP ASSEMBLY (LOW-SHORT, LH)
					1			D3168-042	STEP ASSEMBLY (LOW-SHORT, RH)
						1		D3272-041	STEP ASSEMBLY (HIGH-LONG, LH)
							1	D3272-042	STEP ASSEMBLY (HIGH-LONG, RH)
4	4							D2182B035	RUBBER CUSHION
		2	2	2	2			D2230-1	MOUNTING LUG
		2	2	2	2	4	4	D2230-3	MOUNTING LUG
8	8							D2274	RADIUS BLOCK
						2	2	D2618	BUSHING
4	4	4	4	4	4			D2732-030	CUSHION
2	2	1	1	1	1	2	2	D2856-400-720	ABRASION STRIP
2	2							D3064-1	CLAMP
1	1							D3079-041	SUPPORT ASSEMBLY
4	4							D3080-1	CLAMP
						2	2	D3235-1	MOUNTING LUG
						1	1	D3278-041	SUPPORT ASSEMBLY
2	2	2	2	2	2	2	2	AN3-35A	BOLT
10	10	2	2	2	2			AN4-11A	BOLT
		4	4	4	4	8	8	AN4-13A	BOLT
						2	2	AN5-36A	BOLT
4	4	4	4	4	4	4	4	AN960JD10	WASHER
20	20	12	12	12	12	16	16	AN960JD416	WASHER
						4	4	AN960JD516	WASHER
2	2	2	2	2	2	2	2	MS21042L3	NUT
10	10	6	6	6	6	8	8	MS21042L4	NUT
						2	2	MS21042L5	NUT
						1	1	*DSI 9410-011	STEP MODIFICATION KIT

*DSI 9410-011 Step Modification Kits are provided with all D350-591-311 and D350-591-312 Steps. This kit is provided as an option for the installer and is therefore **NOT REQUIRED** to complete the installation of the D350-591-311 or D350-591-312 Steps. Refer to Figure 21 for installation of the DSI 9410-011 Kit.

• COPYRIGHT © 1993 BY DART AEROSPACE LTD •
THIS DOCUMENT IS PRIVATE AND CONFIDENTIAL AND IS SUPPLIED ON THE EXPRESS CONDITION THAT IT IS NOT TO BE USED FOR ANY PURPOSE OR COPIED OR COMMUNICATED TO ANY OTHER PERSON WITHOUT WRITTEN PERMISSION FROM DART AEROSPACE LTD.